850 nm	T-85-1250-G-B	*1.25Gbps PIN-TIA (850nm)*

Features

- GaAs/InGaP PIN Photodiode with transimpedance amplifer
- High sensitivity with AGC
- Differential ended output
- Single +5V operation
- -40 ~85℃ operating temperature

Packaging

- Integrated 4-pin TO-46 ball lens cap package

Applications

- 1.25 Gbps Gigabit Ethernet
- 1.063 Gbps Fiber Channel



Absolute Maximum Ratings(Tc=25℃)			
Parameter	**Symbol**	**Value**	**Unit**
Voltage	V_{cc}	6	V
Operating Temperature	T_{opr}	-40~+85	℃
Storage Temperature	T_{stg}	-40~+85	℃

DC Electrical Characteristics(Tc=25℃)					
Parameter	**Symbol**	**Min.**	**Typ.**	**Max.**	**Unit**
Power Supply	V_{cc}	4.5	5	5.5	V
Differential Output Voltage	V_d	-	-	1.3	V
Supply Current (no load)	I_{cc}	-	-	50	mA

(Operating at V_{cc}=5V , Tc=25℃, R_L=3000Ω, λ=1.3μm, 62.5/125μm SM fiber)

AC/Optical and Electrical Characteristics(Tc=25℃)						
Parameter	**Symbol**	**Min.**	**Typ.**	**Max**	**Unit**	**Test condition**
Detection Range			850		nm	-
Gain Differential	G	0.3	-	30	V/mW	
Bandwidth	BW	850	-	-	MHz	P_f=10μW
Saturation Power	Psat	-	0	-	dBm	λ=850nm
Sensitivity	Sens	-	-	-20	dBm	BER=10^{-10} @1.25Gbps @PRBS 2^7-1
Output Resistance	Rout	-	50	65	ohm	

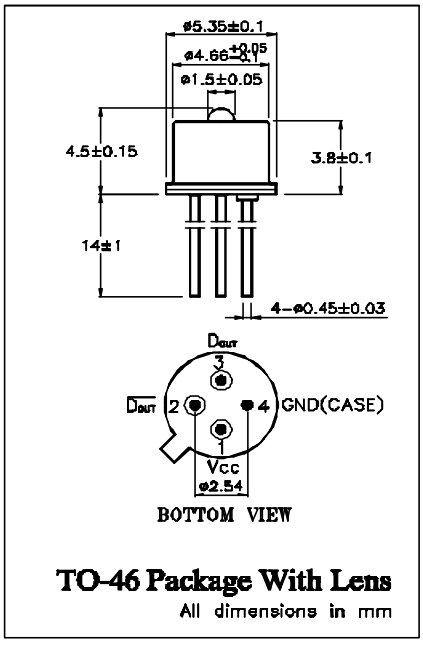

TO-46 Package With Lens

All dimensions in mm

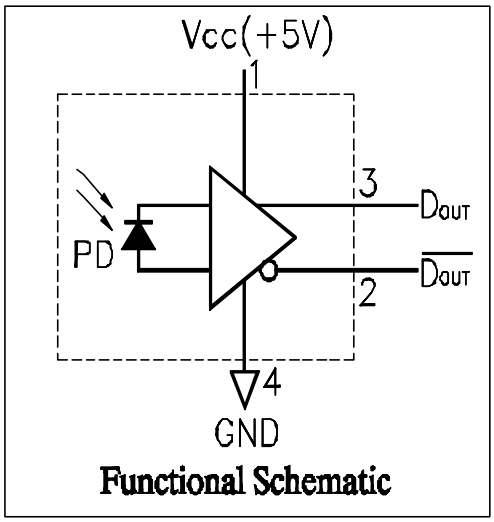

Functional Schematic

Note:

1. Pin assignment can be custom specified。

2. ESD precautions must be taken when handling this product。

3. Specifications subject to change without notice。

Optronics International Corp. No.46, Park Avenue II Road, Science-Based Industrial Park, Hsin-Chu, Taiwan, R.O.C.30077

TEL:886-3-5790177 FAX:886-3-5790289 Email:oicsales@ms27.hinet.net http://www.oic.com.tw