

datasheet

DPSS green laser diode module 532nm

300-0088-00 series

Key features

- Visible light λ = 532nm
- Output power 0.9mW and 4mW
- Circular beam <2.0mm dia
- Compact and self-contained
- Modulation 0-1kHz
- High reliability

Applications

The 300-0088 series 532nm DPSS green laser diode modules are designed for use in industrial and medical alignment, and scientific equipment.

532nm DPSS Green Laser Diode Module

The 300-0088 series DPSS green laser diode modules offer a circular output beam of <2.0mm dia with beam divergence of <2.0mrad, output power of 0.9mW or 4mW, an operating voltage of 6V at an operating current of 250mA maximum, and operating temperature from +10°C to +30°C. Power stability is better than 5% over 7 hours.

The DPSS (diode pumped solid state) laser diode modules have been designed as complete laser diode systems for OEM use. They consist of an anodised aluminium housing, laser diode, drive circuit and collimating lens. Electrical connections are made via external flying leads.

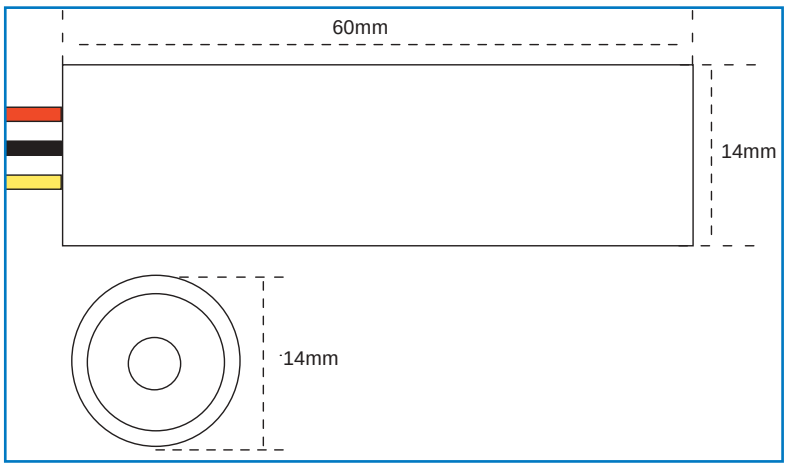

PHOTONIC PRODUCTS

the **Laser Diode** specialists



DPSS green laser diode module 532nm

300-0088-00 series

datasheet

Specifications (Tc=25°C)

ITEM / PART no.	300-0088-00	300-0088-01
Wavelength	532nm	532nm
Output Power	0.9mW	4.0mW
Beam Size (typ)	1.5 mm	1.5 mm
Beam Divergence	<2.0 mrad	<2.0 mrad
Warm up Time	1-2 minutes	1-2 minutes
Power Stability (over 7 hours after warm up)	<5%	<5%
Mode	TEM_{00}	TEM_{00}
Operating Voltage	4-6V DC	4-6V DC
Operating Current (25°C)	<200mA	<250mA
Operating Temperature (ambient)	+10°C to +30°C	+10°C to +30°C
Storage Temperature	-40°C to +60°C	-40°C to +60°C
Housing Material	Anodised Aluminium	Anodised Aluminium
Weight	40g	40g
Lifetime MTTF (typ)	5000 hours	5000 hours
Modulation	0 to 1kHz, 5V=ON, 0V=OFF	0 to 1kHz, 5V=ON, 0V=OFF
Mechanical	14mm ± 0.1mm diameter, 60mm length	

Heat Sinking

If the case temperature of the laser diode exceeds its maximum specification, premature or catastrophic failure may occur. To ensure the maximum life of the laser diode, it is recommended that an additional electrically insulated heatsink of at least 50 sq cm be used. Thermal transfer cream can be used to improve contact and heat dissipation. Do not restrict air circulation around the device.

Power Connections

These DPSS laser diode modules require a regulated input voltage of 4-6V. Connections are made via the 3 pre-tinned external flying leads, (red is positive, black is negative, yellow is modulation).

WARNING: The housing is internally connected to the positive supply rail. Damage to the external anodised surfaces will result in the housing being at positive potential.

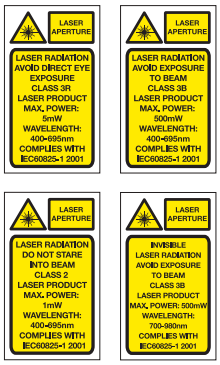

Laser Safety

The light emitted from these devices has been set in accordance with IEC60825. However, staring into the beam, whether directly or indirectly, must be avoided. IEC60825 classifies laser products into three different categories depending on light emitted, wavelength and eye safety.

CLASS II
"Caution", visible laser light less than 1.0mW. Considered eye safe, normal exposure to this type of beam will not cause permanent damage to the retina.

CLASS IIIR
"Danger", visible laser light between 1.0mW and 5.0mW. Considered eye safe with caution. Focusing of this light into the eye could cause some damage.

CLASS IIIB
"Danger", infrared (IR), and high power visible lasers considered dangerous to the retina if exposed.

NB: It is important to note that while complying with the above classifications, unless otherwise stated, our laser diode products are not certified and are designed solely for use in OEM products. The way in which the device is used in the final product may alter its original design classification, and it is the responsibility of the OEM to ensure compliance with the relevant standards.

PHOTONIC PRODUCTS UK LIMITED
Unit 1 Twyford Business Centre, London Road
Bishops Stortford, Hertfordshire CM23 3YT, UK
Telephone: **+44 (0) 1279 719190**
Facsimile: **+44 (0) 1279 719191**
E-mail: **sales@photonic-products.com**
www.photonic-products.com

PHOTONIC PRODUCTS USA
Telephone: **+1 714-841-1960**
E-mail: **salesusa@photonic-products.com**
PHOTONIC PRODUCTS GERMANY
Telefon: **+49 (0) 8142 / 669 8364**
E-mail: **salesgermany@photonic-products.com**
www.photonic-products.com

PHOTONIC PRODUCTS

Issue B:03/04

the **Laser Diode** specialists