980 nm LASER DIODE

DL-LS6001

Tentative

SANYO

Ver.2 Dec. 2002

Features

- Wavelength : 980 nm (Typ.)
- Light output : 50 mW CW
- Low threshold current : Ith = 20 mA (Typ.)
- Small aspect ratio : 2.5 (Typ.)

Applications

- Erbium-doped fiber amplifiers
- Free space optical communication

Package

Tolerance : ± 0.2
(Unit : mm)

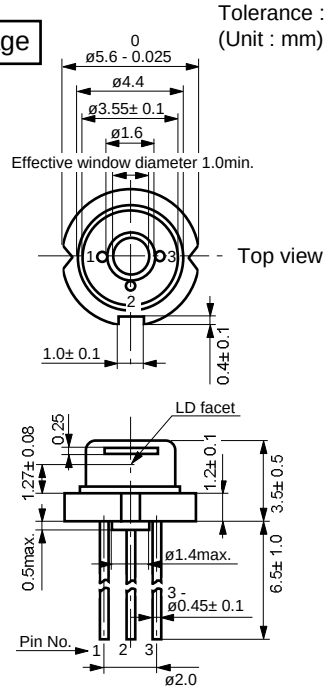

Pin Connection

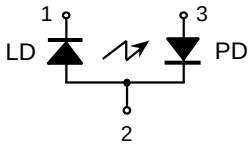

Absolute Maximum Ratings

(Tc=25°C)

Parameter		Symbol	Ratings	Unit
Light Output	CW	Po	60	mW
Reverse Voltage	Laser	VR	2	V
	PD		30	
Operating Temperature		Topr	-10 to +70	°C
Storage Temperature		Tstg	-40 to +85	°C

Electrical and Optical Characteristics [1) 2)]

(Tc=25°C)

Parameter		Symbol	Condition	Min.	Typ.	Max.	Unit
Threshold Current		Ith	CW	-	20	30	mA
Operating Current		Iop	Po=50mW	-	80	100	mA
Operating Voltage		Vop	Po=50mW	-	1.7	2.0	V
Lasing Wavelength		Lp	Po=50mW	970	980	990	nm
Beam Divergence [3)]	Perpendicular	Qv	Po=50mW	18	23	28	°
	Parallel	Qh	Po=50mW	7	9	11	°
Off Axis Angle	Perpendicular	dQv	-	-	-	± 3	°
	Parallel	dQh	-	-	-	± 3	°
Differential Efficiency		dPo/dIop	-	-	0.8	-	mW/mA
Monitoring Output Current		Im	Po=50mW	-	-	-	mA

1) Initial values 2) All the above values are evaluated with Tottori Sanyo's measuring apparatus
3) Full angle at half maximum

Note : The above product specification are subject to change without notice.

Tottori SANYO Electric Co., Ltd. LED Division
5-318, Tachikawa, Tottori 680-8634 Japan TEL : +81-857-21-2137 FAX : +81-857-21-2161