HL6314MG/24MG

AlGaInP Laser Diodes

opnext
Powered by HITACHI

ODE-208-262E (Z)

Rev.5
Jan. 2003

Description

The HL6314MG/24MG are 0.63 μm band AlGaInP laser diodes with a multi-quantum well (MQW) structure. They are suitable as light sources for laser pointers and optical equipment for amusement.

Application

- Laser pointer

Features

- Visible light output: 635 nm Typ
- Single longitudinal mode
- Optical output power: 3 mW CW
- Low operating current: 30 mA Typ
- Low operating voltage: 2.7 V Max
- TM mode oscillation

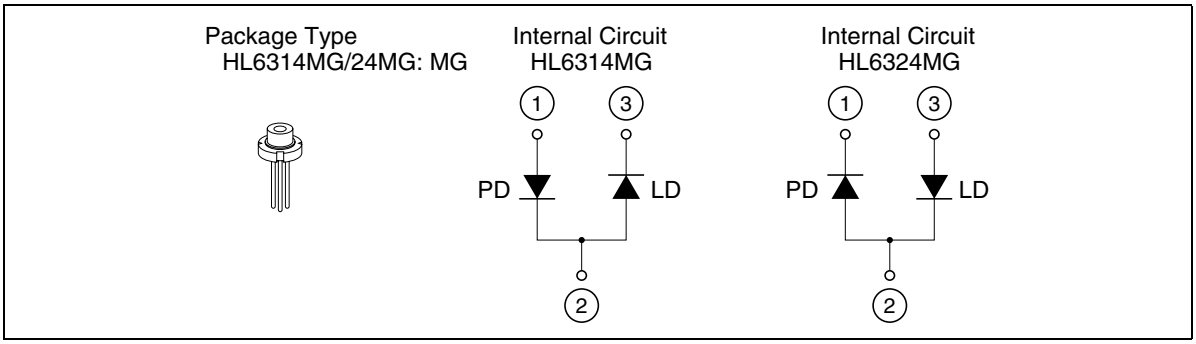

Absolute Maximum Ratings

(T_C = 25°C)

Item	Symbol	Rated Value	Unit
Optical output power	P_O	3	mW
Pulse optical output power	$P_{O(pulse)}$	5 *	mW
LD reverse voltage	$V_{R(LD)}$	2	V
PD reverse voltage	$V_{R(PD)}$	30	V
Operating temperature	Topr	–10 to +50	°C
Storage temperature	Tstg	–40 to +85	°C

Note: Pulse condition : Pulse width ≤ 1 μs , duty ≤ 50%

Optical and Electrical Characteristics

(T_C = 25°C)

Item	Symbol	Min	Typ	Max	Unit	Test Conditions
Optical output power	P_O	3	—	—	mW	—
Threshold current	Ith	—	25	35	mA	—
Operating current	I_{OP}	—	30	42	mA	P_O = 3 mW
Operating voltage	V_{OP}	—	—	2.7	V	P_O = 3 mW
Beam divergence parallel to the junction	θ//	6	8	10	deg.	P_O = 3 mW
Beam divergence parpendicular to the junction	θ⊥	23	30	39	deg.	P_O = 3 mW
Astigmatism	A_S	—	8	—	μm	P_O = 3 mW, NA = 0.55
Lasing wavelength	λp	630	635	640	nm	P_O = 3 mW
Monitor current	I_S	0.08	0.15	0.40	mA	P_O = 3 mW, $V_{R(PD)}$ = 5 V

Typical Characteristic Curves

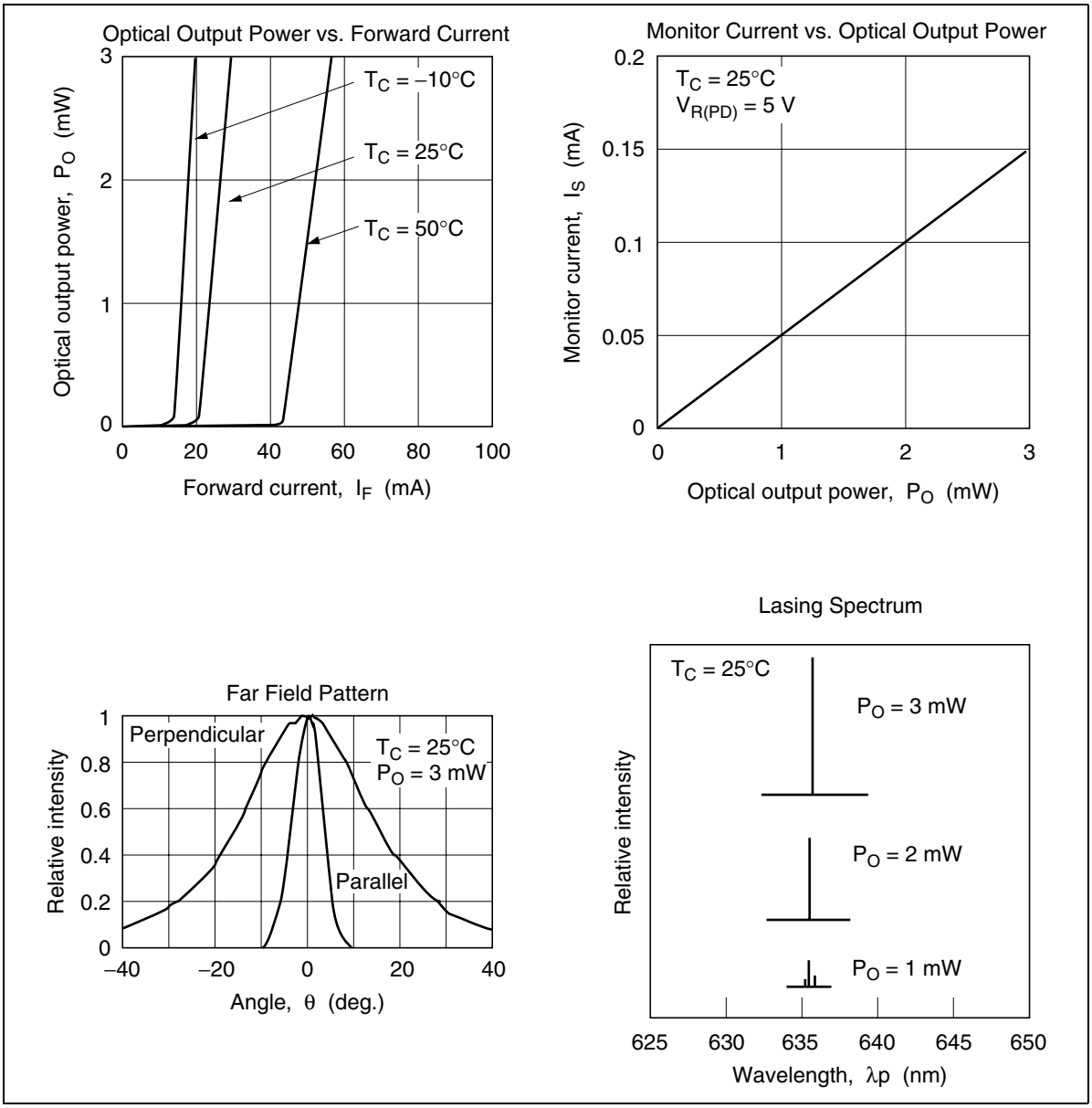

opnext
Powered by HITACHI

Typical Characteristic Curves (cont)

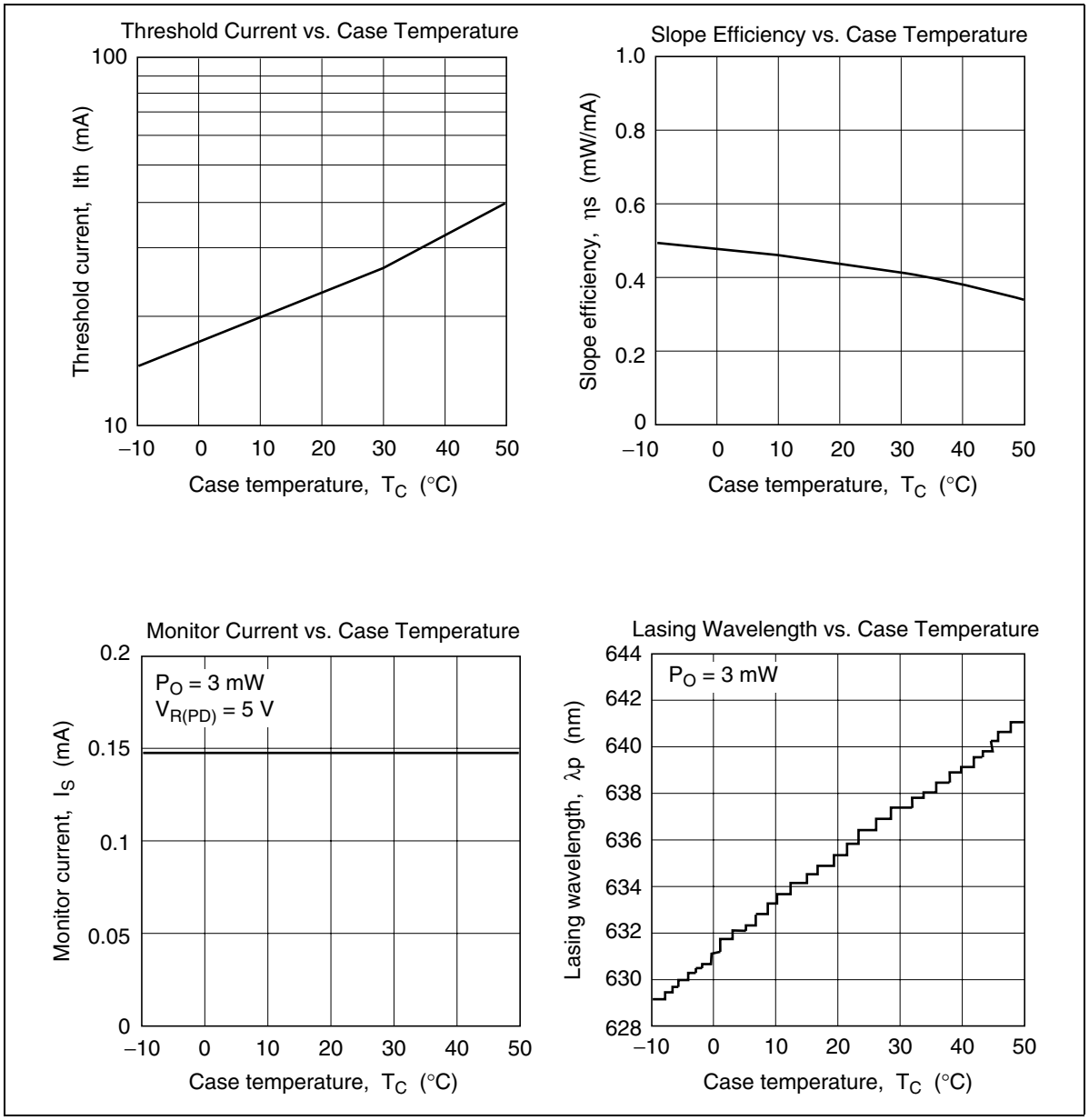

Typical Characteristic Curves (cont)

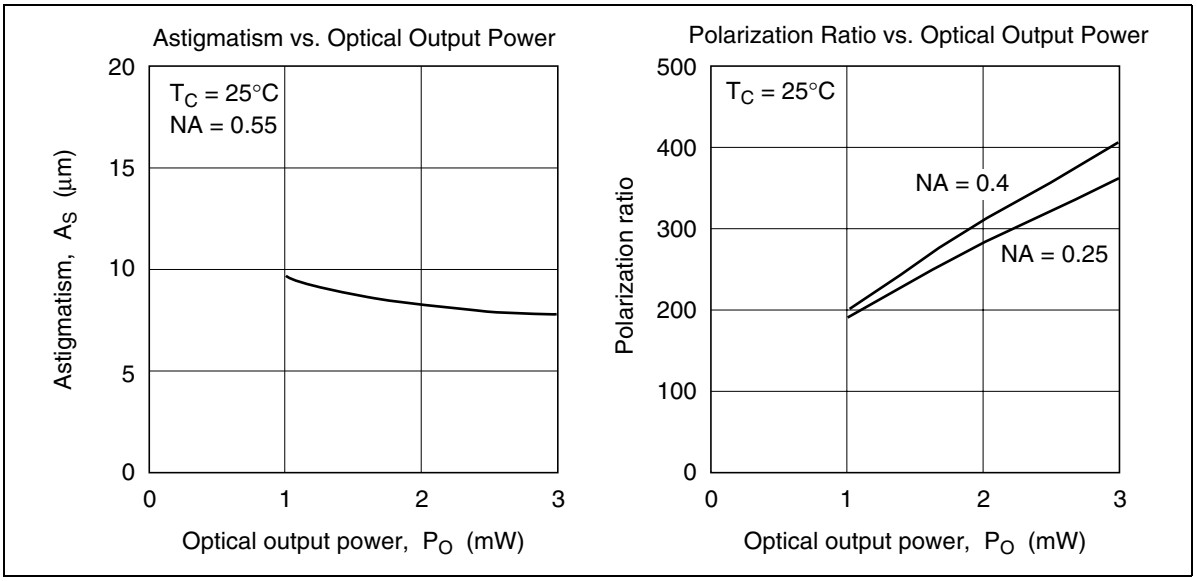

opnext
Powered by HITACHI

Package Dimensions

As of July, 2002
Unit: mm

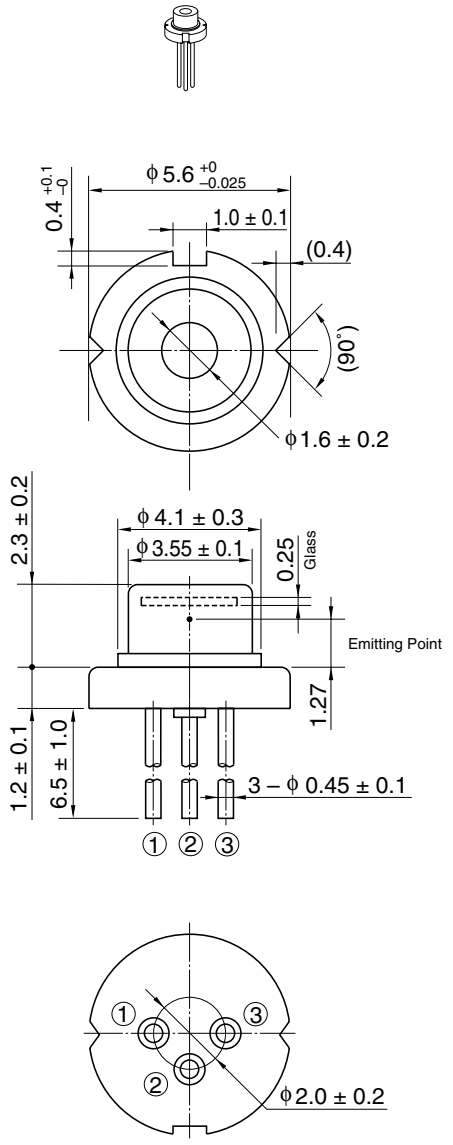

OPJ Code	LD/MG
JEDEC	—
JEITA	—
Mass (reference value)	0.3 g

opnext
Powered by HITACHI

Cautions

1. Opnext Japan,Inc.(OPJ) neither warrants nor grants licenses of any our rights or any third party's patent, copyright, trademark, or other intellectual property rights for information contained in this document. OPJ bears no responsibility for problems that may arise with third party's rights, including intellectual property rights, in connection with use of the information contained in this document.
2. Products and product specifications may be subject to change without notice. Confirm that you have received the latest product standards or specifications before final design, purchase or use.
3. OPJ makes every attempt to ensure that its products are of high quality and reliability. However, contact our sales office before using the product in an application that demands especially high quality and reliability or where its failure or malfunction may directly threaten human life or cause risk of bodily injury, such as aerospace, aeronautics, nuclear power, combustion control, transportation, traffic, safety equipment or medical equipment for life support.
4. Design your application so that the product is used within the ranges guaranteed by OPJ particularly for maximum rating, operating supply voltage range, heat radiation characteristics, installation conditions and other characteristics. OPJ bears no responsibility for failure or damage when used beyond the guaranteed ranges. Even within the guaranteed ranges, consider normally foreseeable failure rates or failure modes in semiconductor devices and employ systemic measures such as fail-safes, so that the equipment incorporating OPJ product does not cause bodily injury, fire or other consequential damage due to operation of the OPJ product.
5. This product is not designed to be radiation resistant.
6. No one is permitted to reproduce or duplicate, in any form, the whole or part of this document without written approval from OPJ.
7. Contact our sales office for any questions regarding this document or OPJ products.

1. The laser light is harmful to human body especially to eye no matter what directly or indirectly. The laser beam shall be observed or adjusted through infrared camera or equivalent.
2. This product contains gallium arsenide (GaAs), which may seriously endanger your health even at very low doses. Please avoid treatment which may create GaAs powder or gas, such as disassembly or performing chemical experiments, when you handle the product.
   When disposing of the product, please follow the laws of your country and separate it from other waste such as industrial waste and household garbage.
3. Definition of items shown in this CAS is in accordance with that shown in Opto Device Databook issued by OPJ unless otherwise specified.

Sales Offices

opnext
Powered by HITACHI

Opto Device Business Unit Opnext Japan, Inc.
190 Kashiwagi, Komoro-shi, Nagano 384-8511, Japan
Tel: (0267) 22-4111

For the detail of Opnext, Inc., see the following homepage:
Japan (Japanese) http://japan.opnext.com/optodevice/
Other area (English) http://www.opnext.com/optodevice/

Copyright © Opnext Japan, Inc., 2003. All rights reserved. Printed in Japan.
Colophon 0.0

opnext
Powered by HITACHI