BLUE-VIOLET LASER DIODE

DL-LS5000

Tentative

SANYO

Ver.3 July. 2003

Features

- Short wavelength : 405 nm (Typ.)
- Light Output: 5mW CW
- Low threshold current : Ith = 50 mA (Typ.)
- Small package : ø5.6 mm

Applications

Blu-ray Disc,
Laser mobule

Package

Tolerance : ± 0.2
(Unit : mm)

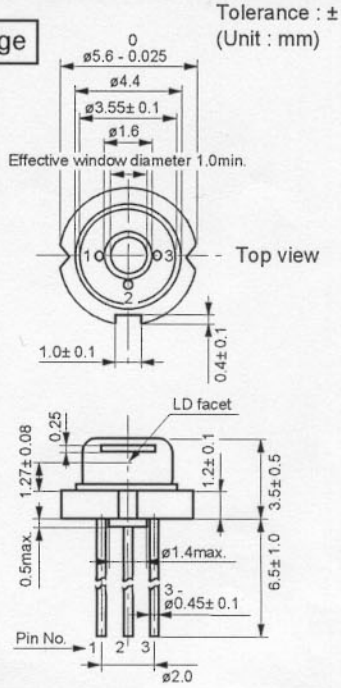

Pin Connection

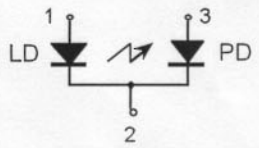

Absolute Maximum Ratings

(Tc=25°C)

Parameter		Symbol	Ratings	Unit
Light Output	CW	Po	7	mW
Reverse Voltage	Laser	VR	2	V
	PD		30	
Operating Temperature		Topr	-10 to +60	°C
Storage Temperature		Tstg	-40 to +85	°C

Electrical and Optical Characteristics 1) 2)

(Tc=25°C)

Parameter		Symbol	Condition	Min.	Typ.	Max.	Unit
Threshold Current		Ith	CW	-	50	65	mA
Operating Current		Iop	Po=5mW	-	58	73	mA
Operating Voltage		Vop	Po=5mW	-	5.5	6.5	V
Lasing Wavelength		Lp	Po=5mW	395	405	415	nm
Beam Divergence 3)	Perpendicular	Qv	Po=5mW	17	22	27	°
	Parallel	Qh	Po=5mW	7	8	12	°
Off Axis Angle	Perpendicular	dQv	-	-	-	± 3	°
	Parallel	dQh	-	-	-	± 2	°
Differential Efficiency		dPo/dIop	-	0.3	0.6	-	mW/mA
Monitoring Output Current		Im	Po=5mW	0.03	0.06	-	mA
Astigmatism		As	Po=5mW	-	3	-	µm

1) Initial values 2) All the above values are evaluated with Tottori Sanyo's measuring apparatus
3) Full angle at half maximum

Note : The above product specification are subject to change without notice.

Tottori SANYO Electric Co., Ltd. LED Business Unit
5-318, Tachikawa, Tottori 680-8634 Japan TEL : +81-857-21-2137 FAX : +81-857-21-2161