BLUE-VIOLET LASER DIODE

DL-LS5008

Tentative

SANYO

Ver.1 Oct. 2003

Features

- Short wavelength : 405 nm (Typ.)
- Light Output: 40mW CW at 80mW (pulse)
- Low threshold current : Ith = 50 mA (Typ.)
- Small package : ø5.6 mm

Applications

Next generation DVD
Laser module

Package

Tolerance : ± 0.2
(Unit : mm)

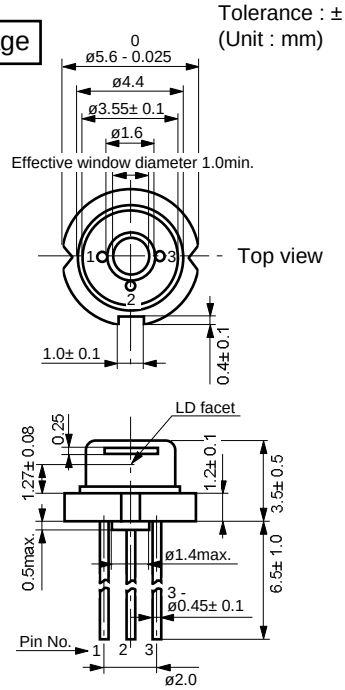

Pin Connection

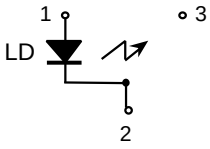

Absolute Maximum Ratings

(Tc=25°C)

Parameter		Symbol	Ratings	Unit
Light Output	CW	Po (CW)	40	mW
	Pulse	Po(pulse)	80	
Reverse Voltage	Laser	VR	2	V
Operating Temperature		Topr	-10 to +60	°C
Storage Temperature		Tstg	-40 to +85	°C

Electrical and Optical Characteristics [1) 2)]

(Tc=25°C)

Parameter		Symbol	Condition	Min.	Typ.	Max.	Unit
Threshold Current		Ith	CW	-	50	-	mA
Operating Current		Iop	Po=40mW	-	90	-	mA
Operating Voltage		Vop	Po=40mW	-	5.8	-	V
Lasing Wavelength		Lp	Po=40mW	-	405	-	nm
Beam Divergence [3)]	Perpendicular	Qv	Po=40mW	-	22	-	°
	Parallel	Qh	Po=40mW	-	8	-	°
Off Axis Angle	Perpendicular	dQv	-	-	-	± 3	°
	Parallel	dQh	-	-	-	± 2	°
Differential Efficiency		dPo/dIop	-	-	0.9	-	mW/mA
Astigmatism		As	Po=40mW	-	3	-	µm

1) Initial values 2) All the above values are evaluated with Tottori Sanyo's measuring apparatus
3) Full angle at half maximum

Note : The above product specification are subject to change without notice.

Tottori SANYO Electric Co., Ltd. LED Business Unit
5-318, Tachikawa, Tottori 680-8634 Japan TEL : +81-857-21-2137 FAX : +81-857-21-2161