HL6331/32G

Low Operating Current Visible Laser Diode

HITACHI

ADE-208-819 (Z)
Target Specification
1st Edition
Sep. 1999

Description

The HL6331/32G are 0.63 μm band AlGaInP 10mW laser diodes with a multi-quantum well (MQW) structure. They are suitable as light sources for laser levelers, laser scanners and optical equipment for measurement.

Application

- Laser leveler
- Laser scanner
- Measurement

Features

- Visible light output : 635 nm Typ
- Optical output power : 10 mW CW
- Low operating current : 55 mA Typ
- Low operating voltage : 2.4 V Max
- Operating temperature : +60°C
- TM mode oscillation

Internal Circuit

Package Type
• HL6331/32G: G2

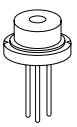

Internal Circuit
• HL6331G

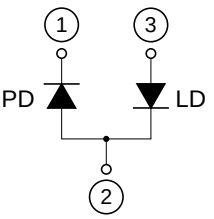

Internal Circuit
• HL6332G

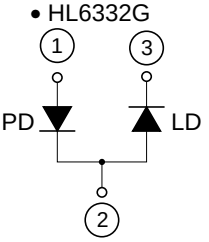

Hitachi semiconductor

Absolute Maximum Ratings (T_C = 25°C)

Item	Symbol	Value	Unit
Optical output power	P_O	10	mW
LD reverse voltage	$V_{R(LD)}$	2	V
PD reverse voltage	$V_{R(PD)}$	30	V
Operating temperature	Topr	–10 to +60	°C
Storage temperature	Tstg	–40 to +85	°C

Optical and Electrical Characteristics (T_C = 25°C)

Item	Symbol	Min	Typ	Max	Unit	Test Condition
Optical output power	P_O	10	—	—	mW	Kink free
Threshold current	Ith	—	40	60	mA	
Operating current	I_{Op}	—	55	75	mA	P_O = 10 mW
Operating voltage	V_{OP}	—	2.2	2.4	V	P_O = 10 mW
Slope efficiency	ηs	0.3	0.6	0.9	mW/mA	6(mW) / ($I_{(8mW)}$ – $I_{(2mW)}$)
Lasing wavelength	λp	630	635	640	nm	P_O = 10 mW
Beam divergence parallel to the junction	θ//	6	8	11	deg.	P_O = 10 mW
Beam divergence parpendicular to the junction	θ⊥	25	31	36	deg.	P_O = 10 mW
Monitor current	I_S	—	0.18	—	mA	P_O = 10 mW, $V_{R(PD)}$ = 5V

Package Dimensions

Unit: mm

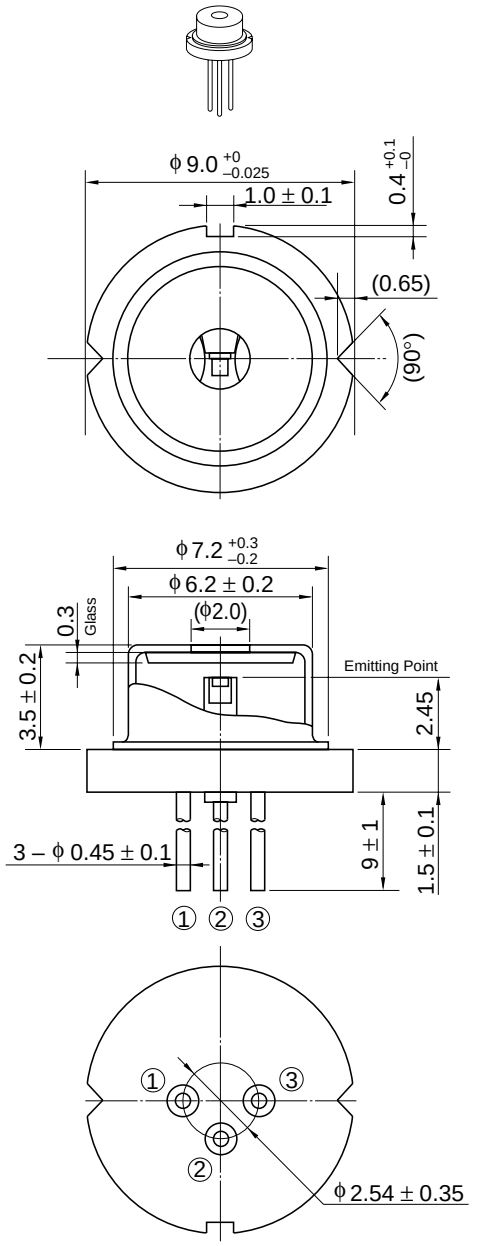

Hitachi Code	LD/G2
JEDEC	—
EIAJ	—
Weight (reference value)	1.1 g

Cautions

1. Hitachi neither warrants nor grants licenses of any rights of Hitachi's or any third party's patent, copyright, trademark, or other intellectual property rights for information contained in this document. Hitachi bears no responsibility for problems that may arise with third party's rights, including intellectual property rights, in connection with use of the information contained in this document.
2. Products and product specifications may be subject to change without notice. Confirm that you have received the latest product standards or specifications before final design, purchase or use.
3. Hitachi makes every attempt to ensure that its products are of high quality and reliability. However, contact Hitachi's sales office before using the product in an application that demands especially high quality and reliability or where its failure or malfunction may directly threaten human life or cause risk of bodily injury, such as aerospace, aeronautics, nuclear power, combustion control, transportation, traffic, safety equipment or medical equipment for life support.
4. Design your application so that the product is used within the ranges guaranteed by Hitachi particularly for maximum rating, operating supply voltage range, heat radiation characteristics, installation conditions and other characteristics. Hitachi bears no responsibility for failure or damage when used beyond the guaranteed ranges. Even within the guaranteed ranges, consider normally foreseeable failure rates or failure modes in semiconductor devices and employ systemic measures such as fail-safes, so that the equipment incorporating Hitachi product does not cause bodily injury, fire or other consequential damage due to operation of the Hitachi product.
5. This product is not designed to be radiation resistant.
6. No one is permitted to reproduce or duplicate, in any form, the whole or part of this document without written approval from Hitachi.
7. Contact Hitachi's sales office for any questions regarding this document or Hitachi semiconductor products.

1. The laser light is harmful to human body especially to eye no matter what directly or indirectly. The laser beam shall be observed or adjusted through infrared camera or equivalent.

HITACHI

Hitachi, Ltd.
Semiconductor & IC Div.
Nippon Bldg., 2-6-2, Ohte-machi, Chiyoda-ku, Tokyo 100-0004, Japan
Tel: Tokyo (03) 3270-2111 Fax: (03) 3270-5109

URL
NorthAmerica : http:semiconductor.hitachi.com/
Europe : http://www.hitachi-eu.com/hel/ecg
Asia (Singapore) : http://www.has.hitachi.com.sg/grp3/sicd/index.htm
Asia (Taiwan) : http://www.hitachi.com.tw/E/Product/SICD_Frame.htm
Asia (HongKong) : http://www.hitachi.com.hk/eng/bo/grp3/index.htm
Japan : http://www.hitachi.co.jp/Sicd/indx.htm

For further information write to:

Hitachi Semiconductor
(America) Inc.
179 East Tasman Drive,
San Jose,CA 95134
Tel: <1> (408) 433-1990
Fax: <1>(408) 433-0223

Hitachi Europe GmbH
Electronic components Group
Dornacher Straβe 3
D-85622 Feldkirchen, Munich
Germany
Tel: <49> (89) 9 9180-0
Fax: <49> (89) 9 29 30 00

Hitachi Europe Ltd.
Electronic Components Group.
Whitebrook Park
Lower Cookham Road
Maidenhead
Berkshire SL6 8YA, United Kingdom
Tel: <44> (1628) 585000
Fax: <44> (1628) 778322

Hitachi Asia Pte. Ltd.
16 Collyer Quay #20-00
Hitachi Tower
Singapore 049318
Tel: 535-2100
Fax: 535-1533

Hitachi Asia Ltd.
Taipei Branch Office
3F, Hung Kuo Building. No.167,
Tun-Hwa North Road, Taipei (105)
Tel: <886> (2) 2718-3666
Fax: <886> (2) 2718-8180

Hitachi Asia (Hong Kong) Ltd.
Group III (Electronic Components)
7/F., North Tower, World Finance Centre,
Harbour City, Canton Road, Tsim Sha Tsui,
Kowloon, Hong Kong
Tel: <852> (2) 735 9218
Fax: <852> (2) 730 0281
Telex: 40815 HITEC HX

Copyright ' Hitachi, Ltd., 1999. All rights reserved. Printed in Japan.