Quick Reference Guide for Visible and Infrared Laser Diodes

HITACHI

ADE-308-007B

Rev.2
Sep. 2001
Hitachi

Safety Considerations

Be sure to avoid direct exposure of human eyes to high power laser beams emitted from laser diodes. Even though barely visible and/or invisible to the human eye, they can be quite harmful. In particular, avoid looking directly into a laser diode or collimated beam along its optical axis when the diode is activated. One simple way to determine the optical path is to use a phosphor plate or infrared sensitive camera.

Hitachi certifies compliance with US Safety Regulations (21 CFR Subchapter J) on laser products, as stipulated by the U.S. Department of Health and Human Services. The Hitachi products shown here correspond to the category "CLASS IIIb LASER PRODUCT" in this regulation.



"VISIBLE AND/OR INVISIBLE LASER RADIATION - AVOID DIRECT EXPOSURE TO BEAM"

PEAK POWER 60 mW
WAVELENGTH 625 ~ 1600 nm

"CLASS IIIb LASER PRODUCT"

This product conforms to FDA regulations 21 CRF Chapter 1, Subchapter J.

AVOID EXPOSURE : Visible and/or invisible laser radiation is emitted from glass window, fiber pigtail end or laser chip mounted on top of header. Before use, consult appropriate catalogs or manuals.

LASER SAFETY

This laser device in operation produces visible and/or invisible laser radiation which may be harmful to the human eye. Avoid directly looking into the device or the collimated beam along its optical axis when the device is in operation.

MANUFACTURED:

Hitachi, Ltd.
Semiconductor and I.C. Divisin
Nippon Bldg., 2-6-2, Ohte-machi,
Chiyoda-ku, Tokyo 100-0004, JAPAN
Tel : +81-3-3270-2111

USER INSTRUCTIONS:

Be sure to avoid direct exposure of human eyes to high power laser beams emitted from laser diodes. Even though barely visible and/or invisible to the human eye, they can be quite harmful. In particular, avoid looking directly into a laser diode or collimated beam along its optical axis when the diode is activated. One simple way to determine the optical pate is to use a phosphor plate or infrared sensitive camera.

These devices are components to be used in producing complete laser systems. They do not emit radiation unless combined by the end user with other components. Please consult the Opto Data Book for some of the possible uses of these devices.

Because of the small size of the device, the required labels and these instructions are provided in this insert rather than printed on the device.

Cautions

1. Hitachi neither warrants nor grants licenses of any rights of Hitachi's or any third party's patent, copyright, trademark, or other intellectual property rights for information contained in this document. Hitachi bears no responsibility for problems that may arise with third party's rights, including intellectual property rights, in connection with use of the information contained in this document.
2. Products and product specifications may be subject to change without notice. Confirm that you have received the latest product standards or specifications before final design, purchase or use.
3. Hitachi makes every attempt to ensure that its products are of high quality and reliability. However, contact Hitachi's sales office before using the product in an application that demands especially high quality and reliability or where its failure or malfunction may directly threaten human life or cause risk of bodily injury, such as aerospace, aeronautics, nuclear power, combustion control, transportation, traffic, safety equipment or medical equipment for life support.
4. Design your application so that the product is used within the ranges guaranteed by Hitachi particularly for maximum rating, operating supply voltage range, heat radiation characteristics, installation conditions and other characteristics. Hitachi bears no responsibility for failure or damage when used beyond the guaranteed ranges. Even within the guaranteed ranges, consider normally foreseeable failure rates or failure modes in semiconductor devices and employ systemic measures such as fail-safes, so that the equipment incorporating Hitachi product does not cause bodily injury, fire or other consequential damage due to operation of the Hitachi product.
5. This product is not designed to be radiation resistant.
6. No one is permitted to reproduce or duplicate, in any form, the whole or part of this document without written approval from Hitachi.
7. Contact Hitachi's sales office for any questions regarding this document or Hitachi semiconductor products.

1. The laser light is harmful to human body especially to eye no matter what directly or indirectly. The laser beam shall be observed or adjusted through infrared camera or equivalent.
2. This product contains gallium arsenide (GaAs), which may seriously endanger your health even at very low doses. Please avoid treatment which may create GaAs powder or gas, such as disassembly or performing chemical experiments, when you handle the product. When disposing of the product, please follow the laws of your country and separate it from other waste such as industrial waste and household garbage.

Contents

Section 1 Development Trend of Visible and Infrared LDs 1

Section 2 Product Lineup of Visible and Infrared LDs..... 2

Section 3 Optical and Electrical Characteristics of Red & Infrared LDs..... 3

Section 4 According to Optical Power for your Application 4

Section 5 According to Wavelength for your Application..... 5

Section 6 Select for your Application 6

Section 7 Cross Reference..... 7

Section 8 Package Outline..... 8

Section 9 Measures to Prevent Surge Damage to Laser Diodes 9

Section 10 The Way of Packing..... 10

Section 11 Testing Data 11

Section 12 Information and Documents for your Convenience..... 12

Section 1 Development Trend of Visible and Infrared LDs

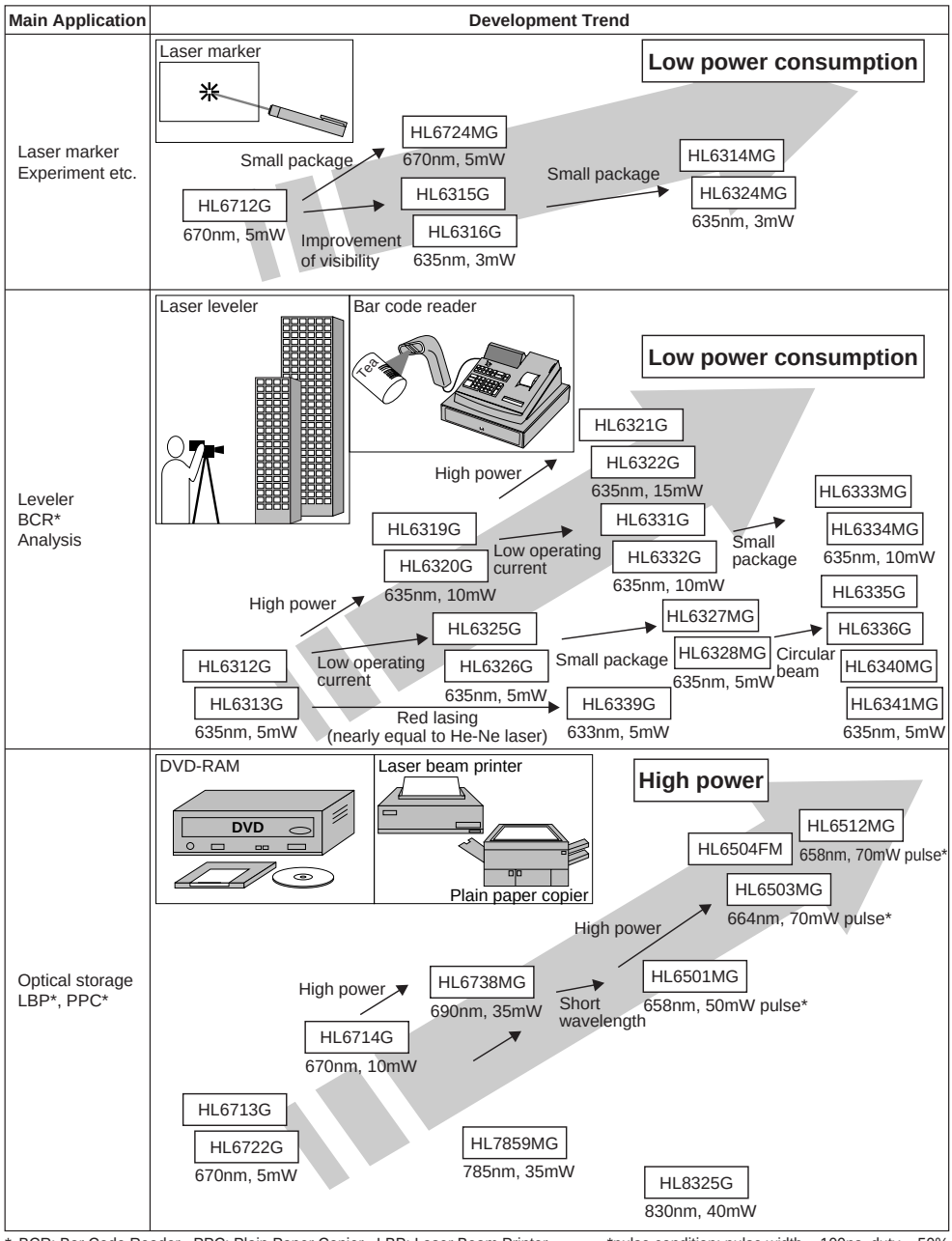

* BCR: Bar Code Reader PPC: Plain Paper Copier LBP: Laser Beam Printer *pulse condition: pulse width = 100ns, duty = 50%

Section 2 Product Lineup of Visible and Infrared LDs

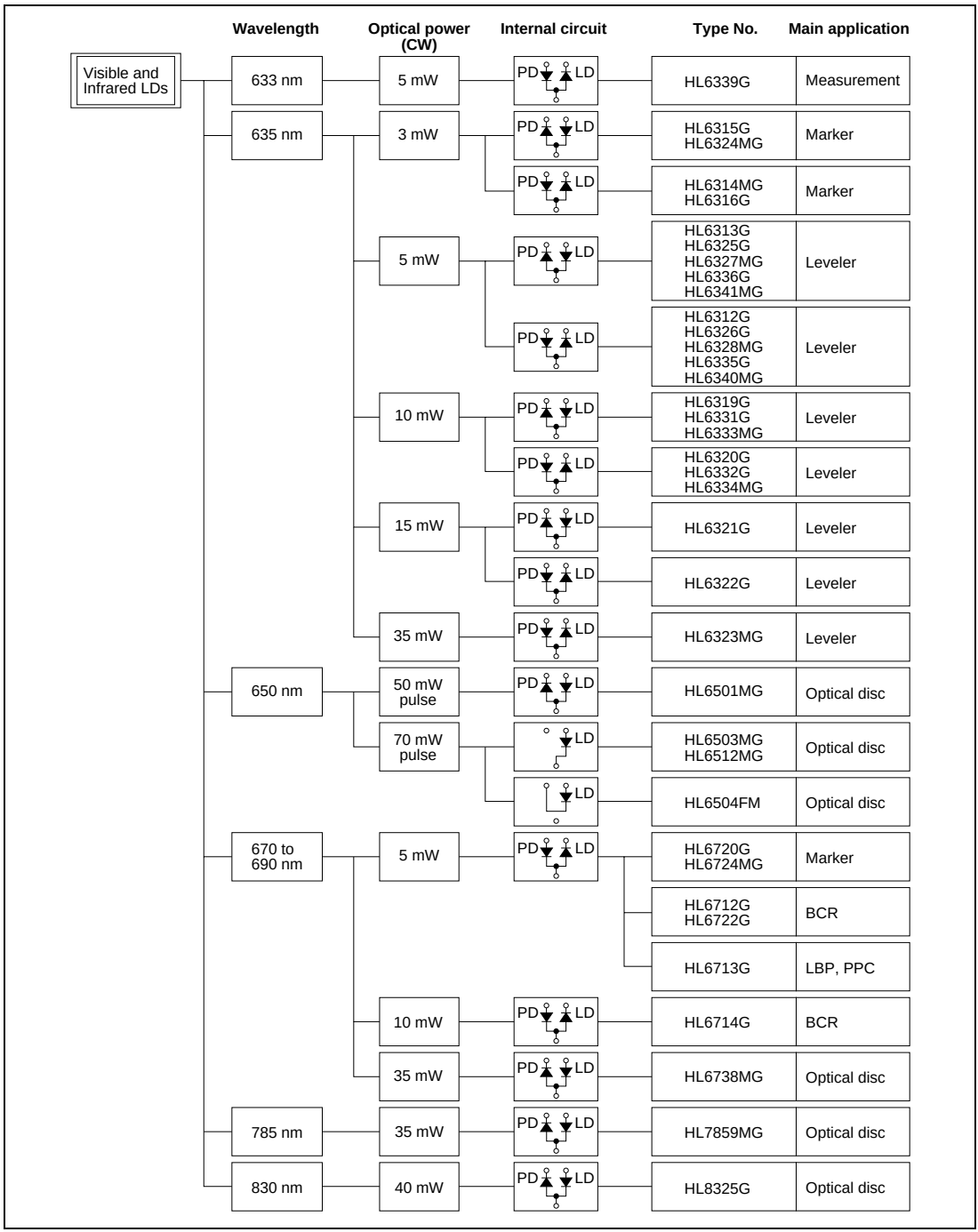

Section 3 Optical and Electrical Characteristics of Red & Infrared LDs

(Tc = 25°C)

Type No.	Mark	Out-line	Internal Circuit*[1]	Maximum Ratings		Optical and Electrical Characteristics (Typ)							Status
				Po CW (mW)	Topr (°C)	Po (mW)	Ith (mA)	Iop (mA)	Is (mA)	λp (nm)	θ// (deg)	θ⊥ (deg)	
HL6312G	DF	G	AC	5	–10 to 50	5	45	55	0.4	635	8	31	MP
HL6313G	DM	G	CC	5	–10 to 50	5	45	55	0.4	635	8	31	MP
HL6314MG	B	MG	AC	3	–10 to 50	3	25	30	0.15	635	8	30	MP
HL6315G	DN	G	CC	3	–10 to 50	3	25	30	0.3	635	8	30	MP
HL6316G	DP	G	AC	3	–10 to 50	3	25	30	0.3	635	8	30	MP
HL6319G	DT	G	CC	10	–10 to 50	10	50	70	0.17	635	8	31	MP
HL6320G	DU	G	AC	10	–10 to 50	10	50	70	0.17	635	8	31	MP
HL6321G	HV	G	CC	15	–10 to 50	15	55	85	0.2	635	8	30	MP
HL6322G	HW	G	AC	15	–10 to 50	15	55	85	0.2	635	8	30	MP
HL6323MG	AU	MG	AC	35	–10 to 50	35	45	95	0.15	639	8.5	30	MP
HL6324MG	M	MG	CC	3	–10 to 50	3	25	30	0.15	635	8	30	MP
HL6325G	DX	G	CC	5	–10 to 60	5	30	40	0.1	635	8	31	MP
HL6326G	DY	G	AC	5	–10 to 60	5	30	40	0.1	635	8	31	MP
HL6327MG	AL	MG	CC	5	–10 to 50	5	30	40	0.07	635	8	31	MP
HL6328MG	AM	MG	AC	5	–10 to 50	5	30	40	0.07	635	8	31	MP
HL6331G	DZ	G	CC	10	–10 to 60	10	40	55	0.15	635	8	31	MP
HL6332G	EA	G	AC	10	–10 to 60	10	40	55	0.15	635	8	31	MP
HL6333MG	AS	MG	CC	10	–10 to 50	10	40	55	0.08	635	8	31	MP
HL6334MG	AT	MG	AC	10	–10 to 50	10	40	55	0.08	635	8	31	MP
HL6335G	EC	G	AC	5	–10 to 50	5	20	25	0.1	635	17	20	MP
HL6336G	ED	G	CC	5	–10 to 50	5	20	25	0.1	635	17	20	MP
HL6339G	EE	G	AC	5	0 to 40	5	45	55	0.05	633	8	30	WS
HL6340MG	EF	MG	AC	5	–10 to 50	5	20	25	0.05	635	17	20	MP
HL6341MG	EG	MG	CC	5	–10 to 50	5	20	25	0.05	635	17	20	MP
HL6501MG	W	MG	CC	35	–10 to 60	30	45	85	0.3	658	8.5	22	MP
HL6503MG	AJ	MG	—	50	–10 to 60	50	45	115	—	664	8.5	21	MP
HL6504FM	AK	FM	—	50	–10 to 60	50	45	115	—	664	8.5	21	MP
HL6512MG	AZ	MG	—	50	–10 to 70**	50	45	115	—	658	8.5	21	MP
HL6712G	DB	G*	AC	5	–10 to 50	5	40	50	0.6	670	8	27	MP
HL6713G	DC	G*	AC	5	–10 to 50	5	40	53	2.0	670	9	30	MP
HL6714G	DD	G	AC	10	–10 to 50	10	35	50	0.8	670	8	22	MP
HL6720G	DG	G	AC	5	–10 to 50	5	30	35	0.1	670	9	30	MP
HL6722G	DJ	G	AC	5	–10 to 50	5	32	42	2.0	670	8	30	MP
HL6724MG	A	MG	AC	5	–10 to 50	5	25	35	0.9	670	8	30	MP
HL6738MG	Q	MG	CC	35	–10 to 70	30	45	90	0.1	690	8.5	19	MP
HL7859MG	V	MG	CC	35	–10 to 60	35	35	90	0.4	785	9.5	23	MP
HL8325G	GE	G	CC	40	–10 to 60	40	40	120	0.4	830	10	22	MP

* Lead length: 14 mm ** pulse operation

Mark layout (Bottom view)

G-type

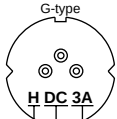

Lot No. { Year code: last character / Monthly code: below table }

Abbreviation of type No.

Abbreviation of Hitachi

Month	1	2	3	4	5	6	7	8	9	10	11	12
Mark	A	B	C	D	E	F	G	H	J	K	L	M

MG/FM-type



Lot No. { Year code: last character / Monthly code: below table }

Abbreviation of type No.
(Some products have one character.)

Products status

MP : Mass production
WS : Working sample (preliminary spec.)
UD : Under development (Target spec.)

Symbols	Items
Po	Optical power
Top	Operating temperature
Ith	Threshold current
Iop	Operating current
Is	Monitor current
λ	Wavelength
θ//	Parallel angle
θ⊥	perpendicular angle

Note: 1. CC: LD cathode common
AC: LD anode common

Section 4 According to Optical Power for your Application

Optical Power Po (mW)	Wavelength λp (nm)	G-type (ϕ9mm) package		MG(FM)-type (ϕ5.6mm) package	
		CC-connection Note)	AC-connection Note)	CC-connection Note)	AC-connection Note)
3	635	HL6315G	HL6316G	HL6324MG	HL6314MG
5	633		HL6339G		
	635	HL6313G	HL6312G	HL6327MG	HL6328MG
		HL6325G	HL6326G		
		HL6336G	HL6335G	HL6341MG	HL6340MG
	670 to 690		HL6720G		HL6724MG
			HL6712G		
			HL6722G		
			HL6713G		
10	635	HL6319G	HL6320G	HL6333MG	HL6334MG
		HL6331G	HL6332G		
	670 to 690		HL6714G		
15	635	HL6321G	HL6322G		
35	635				HL6323MG
	650			HL6501MG	
	670 to 690			HL6738MG	
	785			HL7859MG	
40	830	HL8325G			
50	650			HL6503MG*	
				HL6512MG*	
				HL6504FM**	

Note: CC-connection : LD cathode connect to stem (common)
AC-connection : LD anode connect to stem (common) type

* : without PD
** : floating LD and without PD

Section 5 According to Wavelength for your Application

Wavelength λp (nm)	Optical Power Po (mW)	G-type (ϕ9mm) package		MG(FM)-type (ϕ5.6mm) package	
		CC-connection Note)	AC-connection Note)	CC-connection Note)	AC-connection Note)
633	5		HL6339G		
635	3	HL6315G	HL6316G	HL6324MG	HL6314MG
	5	HL6313G	HL6312G	HL6327MG	HL6328MG
		HL6325G	HL6326G	HL6341MG	HL6340MG
		HL6336G	HL6335G		
	10	HL6319G	HL6320G	HL6333MG	HL6334MG
		HL6331G	HL6332G		
	15	HL6321G	HL6322G		
	35				HL6323MG
650				HL6501MG	
	50			HL6503MG*	
				HL6512MG*	
				HL6504FM**	
670 to 690	5		HL6720G		HL6724MG
			HL6712G		
			HL6722G		
			HL6713G		
	10		HL6714G		
	35			HL6738MG	
785				HL7859MG	
830	40	HL8325G			

Note: CC-connection : LD cathode connect to stem (common)
AC-connection : LD anode connect to stem (common) type

* : without PD
** : floating LD and without PD

Main Application									Optical power P_O (mW)	Wavelength λp (nm)	G-type (ϕ9mm) package		MG(FM)-type (ϕ5.6mm) package	
Experiments etc.	Marker	Leveler	High end leveler	Fiber checker	Measurement	Scanner(PPC, LBP)	Bar code reader	Optical storage			CC-connection Note)	AC-connection Note)	CC-connection Note)	AC-connection Note)
○	○			○	○				5	633		HL6339G		
○	○								3	635	HL6315G	HL6316G	HL6324MG	HL6314MG
○	○	○					○		5		HL6313G	HL6312G		
○	○	○	○	○	○		○				HL6325G	HL6326G	HL6327MG	HL6328MG
○	○	○	○	○	○		○				HL6336G	HL6335G	HL6341MG	HL6340MG
○	○	○		○			○				HL6319G	HL6320G		
○	○	○	○	○	○		○		10		HL6331G	HL6332G	HL6333MG	HL6334MG
○	○	○	○	○	○		○		15		HL6321G	HL6322G		
○	○	○	○	○	○		○		35					HL6323MG
				○	○			○		650			HL6501MG	
								○					HL6503MG*	
								○	50				HL6504FM**	
								○					HL6512MG*	
○	○					○	○		5	670 to 690		HL6712G		HL6724MG
○	○					○	○					HL6720G		
○	○					○	○					HL6722G		
○	○					○	○					HL6713G		
○	○								10			HL6714G		
			○		○			○	35				HL6738MG	
			○		○			○		780			HL7859MG	
								○	40	830	HL8325G			

Note) CC-connection : LD cathode connect to stem (common)
AC-connection : LD anode connect to stem (common)

* : without PD
** : floating LD and without PD type

• Package

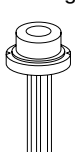

G-type (ϕ9mm)

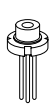

MG/FM-type (ϕ5.6mm)

• Internal circuit

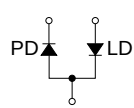

CC-connection type (Cathode common)

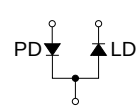

AC-connection type (Anode common)

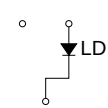

HL6503MG HL6512MG

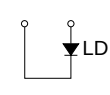

HL6504FM

Section 7 Cross Reference

TOSHIBA	MITSUBISHI	SONY	SANYO	SHARP	HITACHI
					HL6312G
					HL6313G
			DL-3148-023 (40°C)		HL6314MG
					HL6315G
			DL-3038-023 (40°C)		HL6316G
					HL6319G
			DL-4038-031 (50°C)		HL6320G
					HL6321G
					HL6322G
					HL6323MG
			DL-3148-234 (645nm max.)		HL6324MG (640nm max.)
			DL-3038-233		HL6325G
			DL-3038-033 (50°C) (DL-3038-013: 40°C) (DL-3038-034: 645nm max.)		HL6326G (60°C)
				LT050PS	HL6327MG
		SLD1132VS	DL-3148-013 (40°C) DL-3148-033 (DL-3148-034: 645nm max.)	LT050MS	HL6328MG
					HL6331G
			DL-4038-031 (50°C) (DL-4038-021: 40°C)		HL6332G (60°C)
					HL6333MG
			DL-4148-021 (40°C)		HL6334MG (50°C)
					HL6335G
					HL6336G
					HL6340MG
					HL6341MG
	ML1××6		DL-5157-041	LT052PS	HL6501MG
	ML1××14				HL6503MG
TOLD9453MB	ML1××14				HL6504FM
				GH06550B2B	HL6512MG
					HL6712G
			DL-3039-011		HL6713G
			DL-4039-011		HL6714G
					HL6720G
					HL6722G
		SLD1121VS	DL-3149-057		HL6724MG
	ML1××2				HL6738MG

Note: Optical, electrical characteristics and pin arrangements differ among equivalent products. Please check to see detailed specification of each devices which each manufactures released.

Section 8 Package Outline

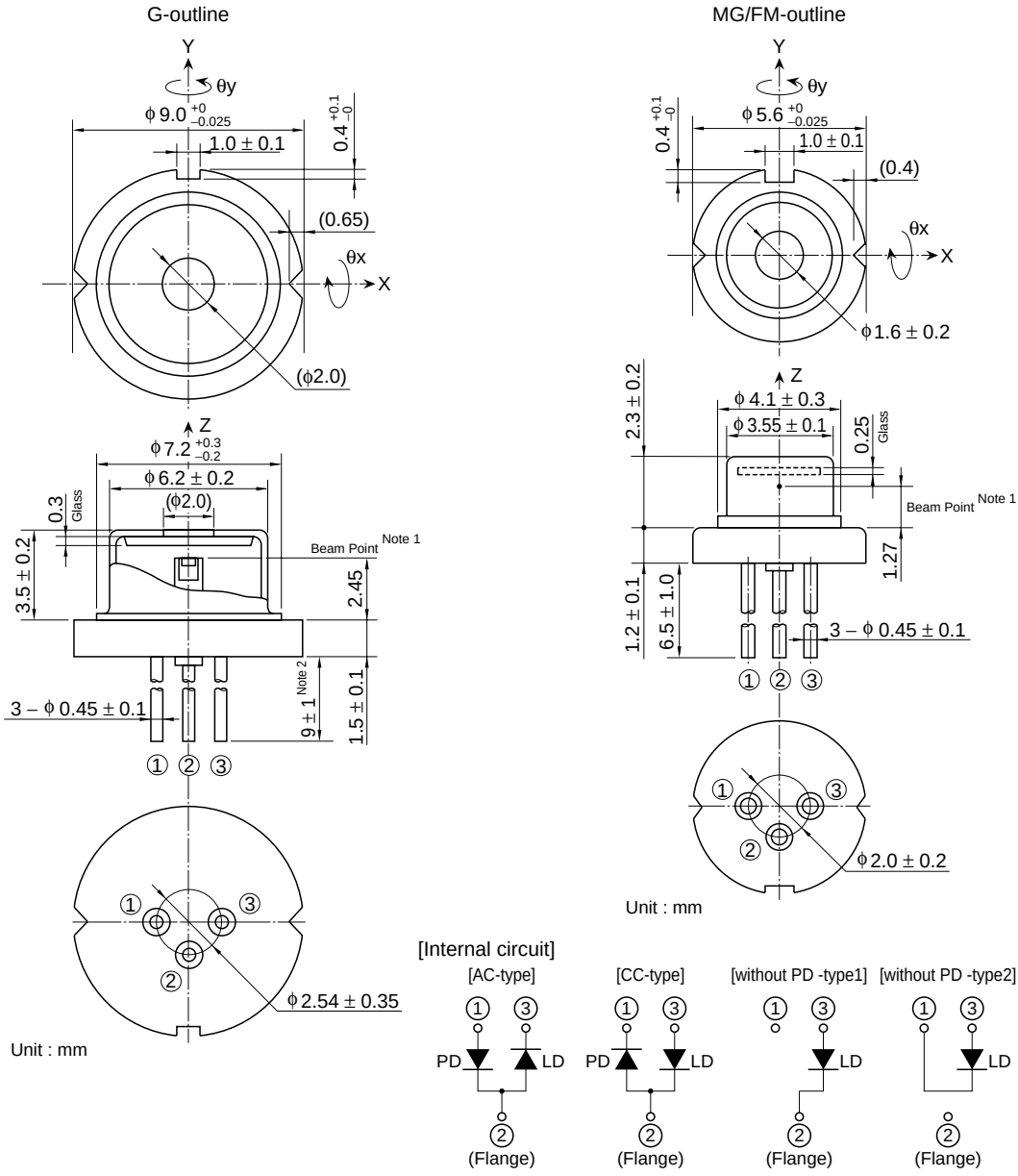

Notes: 1. Beam point is mechanical dimensions from reference of stem.
2. Lead length of HL6712G and HL6713G are applied to 14 ± 1mm.

Table 2 Measures to Prevent Surge Damage to Laser Diodes (examples)

No.	Item	Description	Example Countermeasure
1	Environment	Each operator should be properly grounded.	Wear a wrist band connected to a 1 MΩ
		Use a common ground for the work table and testing equipment.	A common ground should also be used for sealed rooms.
		Make sure work chair is anti-static processed and grounded.	Cover the chair with an anti-static cover and attach a chain ground.
		Use work clothes made of electrically conductive material.	
		Place a conductive mat under the shelf holding products.	
		Use trays made of a conductive material on the production line.	Resistance value: 1 MΩ to 1000 MΩ
		If the working environment is susceptible to static buildup, use an ion blower or work in a weakly ionized environment.	
		Manage the indoor humidity.	Relative humidity target:50 ± 10%
2	Equipment	Distribute power from the step-down power supply to the power supplies of the individual measuring devices via a noise filter.	Recommended filter example: Tokin noise filter, type LF-220, and G-2200
		Attach anti-static devices to conveyor belts that come into contact with products.	
		Ground the suction pads, etc., of product.	
		Make sure that relays connected to the power supply do not cause chattering.	
		Use power supply that does not generate ripples.	Recommended power supply ILX Light wave: LDC-3722B LD Controller ILX Light wave: LDC-3722B LD Controller HP: HP6655A
3	Operation	When measuring electrical characteristics, do not switch power on or off while the rated voltage is being applied.	Always turn variable resistors down to the minimum setting before turning power off. Adjust to rated value after turning power on.
		Do not turn power on or off (to equipment or lights connected to the same line) within the same room during laser diode mounting and adjustment.	
		Adjust the variable resistors that control the power supply voltage to the minimum setting initially. (variable resistors are often left set to intermediate values.)	
4	Jig, etc.	Use globes, finger socks, etc., made of electrically conductive material.	
		Connect the tip of soldering iron being used to a ground.	Use a 3-terminal soldering iron.
		When using an iron blower, make sure to confirm that it is effective in eliminating static electricity.	
		Don't use variable resistors that sick.	Replace variable resistors periodically.

Section 10 The Way of Packing

Hitachi's standard packing way for visible and Infrared LDs are "magazine package", which is free from the lead bending potential during its transportation since the leads contact to nothing. Just slope the magazine to get from it. They will slide from it easily. The magazine is made of the conductive conductive material to prevent ESD problem.

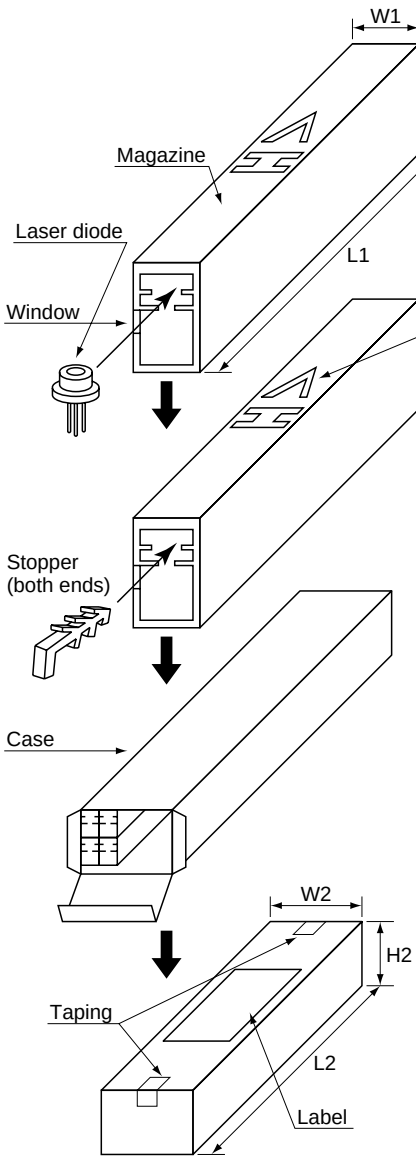

(Unit: mm)

		MG-Type *1		G-Type
		A	B	
Quantity		500 pcs (25 pcs/magazine × 20 magazines)	250 pcs (25 pcs/magazine × 10 magazines)	250 pcs (25 pcs/magazine × 10 magazines)
Magazine	W1	8		12
	L1	160		250
	H1	14		25
Case	W2	82	41	62
	L2	162	162	252
	H2	30	30	52
Marking *2		HITACHI part number, quantity, and mark are indicated by bar code on a label. The mark number is applied only to marked products.		

Note: 1. Either A or B is applied by delivery quantity.
2. The position and format of the label are subject to change.

Section 11 Testing Data

Testing data are available on request with additional charge. Please specify that it is necessary to attach the testing data.

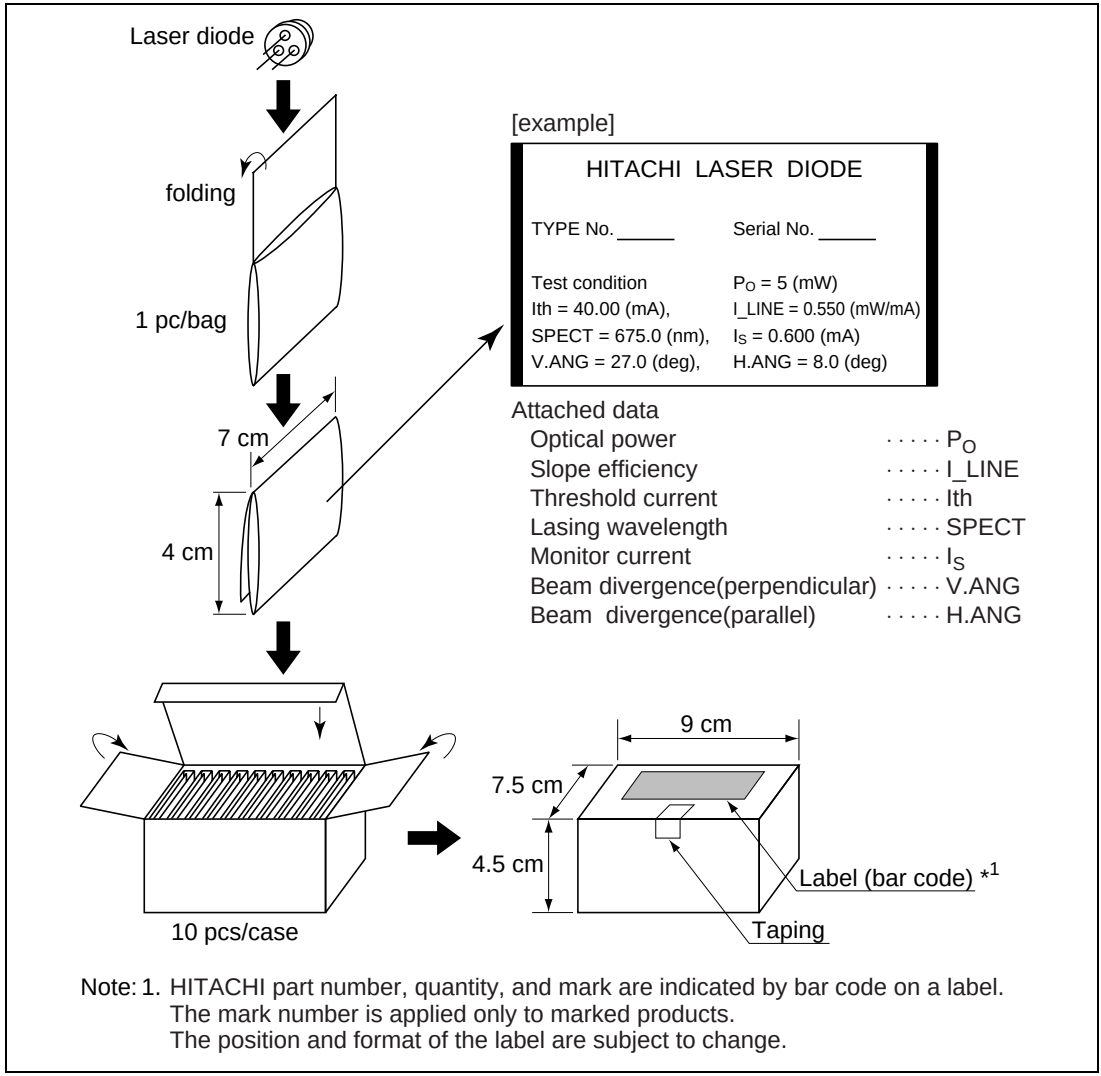

Note: 1. HITACHI part number, quantity, and mark are indicated by bar code on a label.
The mark number is applied only to marked products.
The position and format of the label are subject to change.

Section 12 Information and Documents for your Convenience

1. Hitachi semiconductor web site: http://www.hitachi.co.jp/Sicd/
2. Hitachi Opto devices data book: Document No. ADE-408-001H
3. Hitachi Laser diodes Surge Damage Prevention Manual: Document No. ADE-608-001A
4. Information and Industry Laser diodes: Document No. ADE-508-011E

Quick Reference Guide for
Visible and Infrared Laser Diodes

Publication Date: 1st Edition, July 1998
3rd Edition, September 2001
Published by: Customer Service Division
Semiconductor & Integrated Circuits
Hitachi, Ltd.
Edited by: Technical Documentation Group
Hitachi Kodaira Semiconductor Co., Ltd.
Copyright © Hitachi, Ltd., 1998. All rights reserved. Printed in Japan.